BLADE™ PERF METAL RAILING SYSTEM PRODUCT DATA

BLADE - AVAILABLE INFILLS

- Glass
- Perforated Metal
- Wire Mesh
- Picket Panel
- CableNet
- Multiline
- Laser Cut Panel

VIVA RAILINGS®
LEADERS IN ARCHITECTURAL RAILING SYSTEMS

DESIGN • ENGINEER • FABRICATE • INSTALL

151 W. Vista Ridge Mall Dr. Lewisville, TX 75067 | 972-353-8482 | info@vivarailings.com | vivarailings.com

BLADE™ PERF METAL RAILING SYSTEM

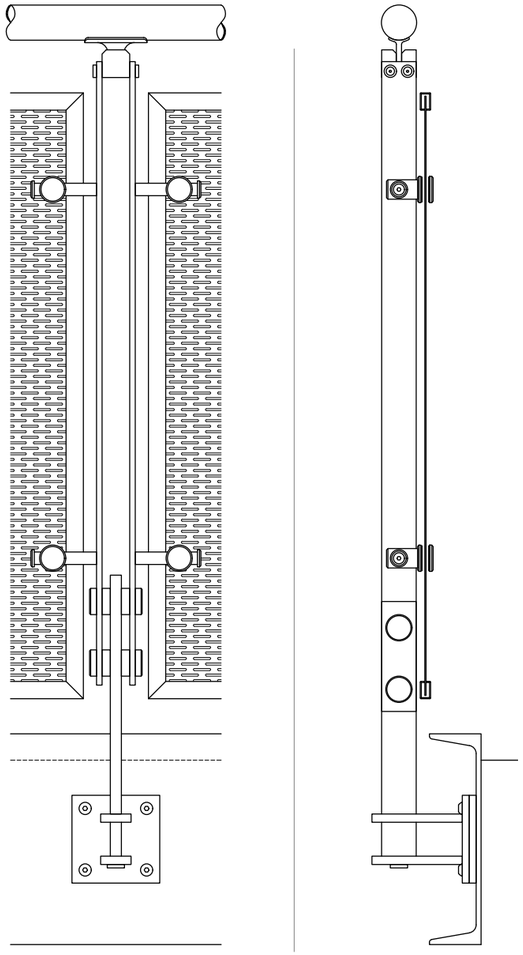

Other mounting options available.

BLADE - AVAILABLE INFILLS

- Glass
- Perforated Metal
- Wire Mesh
- Picket Panel
- CableNet
- Multiline
- Laser Cut Panel

Our BLADE Stainless Steel Railing System has an ultra-contemporary design with minimum obstruction to the line of sight. The system consists of two 2” wide vertical bars, with a cube cap at the top and barrel bolts at the bottom. This expertly-crafted system makes it appear as though the in-fill panels are suspended in air!

BLADE is available in powder-coated colors and with an option for LED illuminated rail.

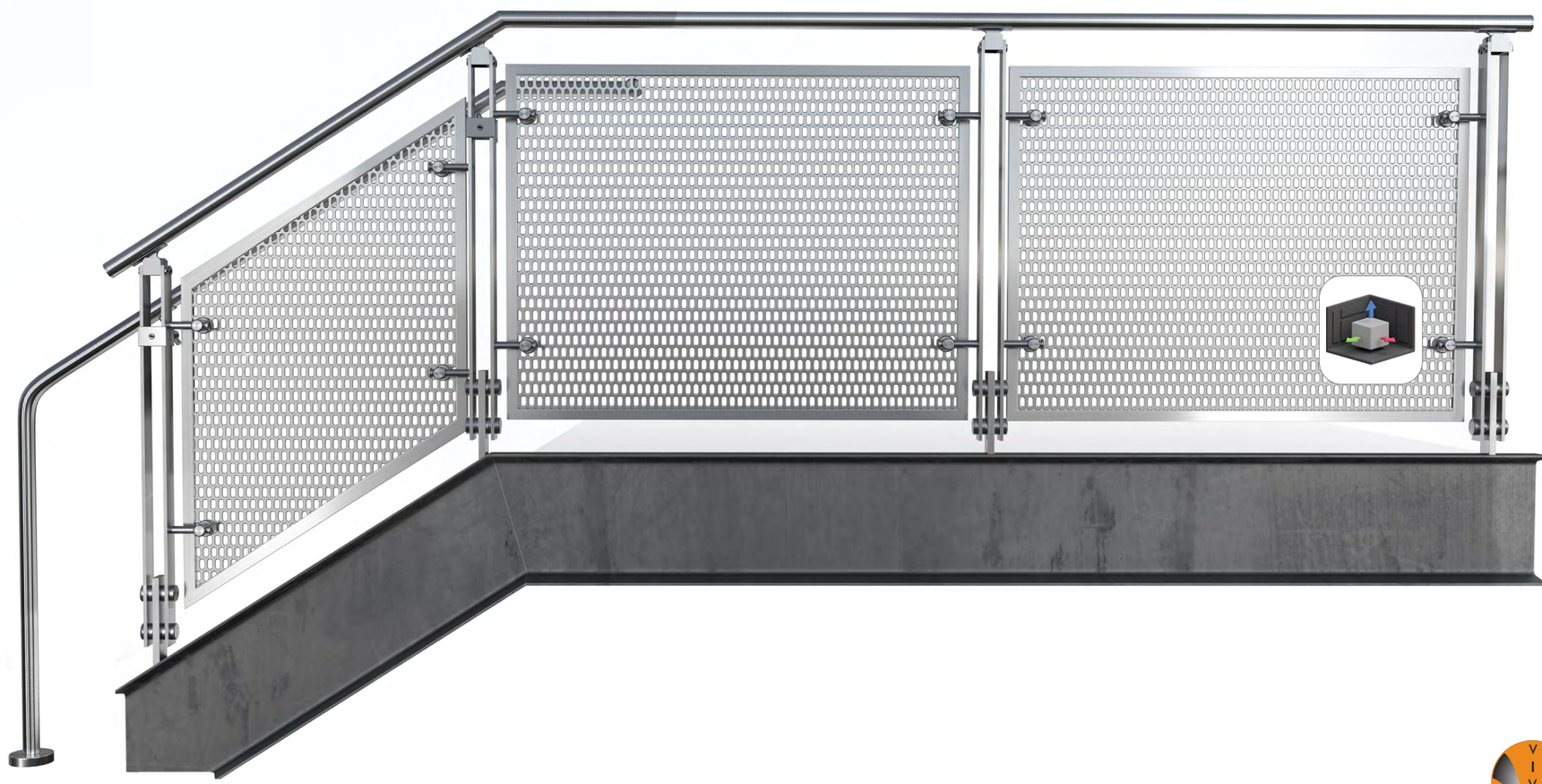

151 W. Vista Ridge Mall Dr. Lewisville, TX 75067 972-353-8482 info@vivarailings.com vivarailings.com

BLADE™ GLASS & METAL SYSTEM - TECHNICAL DATA

	MATERIAL	FINISH	SIZE/SPACING
POST	Stainless Steel (304 or 316)	#6 Satin	2X2-1/4” @ 5’-0” max. O.C. 4’-6” max. for perforated and wire mesh infill. 4’-0” max. for Multiline. Fascia, Top or Core mount.
	Steel	Powder Coat PVDF VIVA Standard: All brackets, spiders, and accessories are satin finish stainless steel and are not coated. A coated finish is available upon request.	
INFILL OPTIONS	Glass	Clear, Digitally Printed, Tinted, Colored Interlayer, Cast	Min. 3/8” laminated glass with PVB or SGP interlayer[1] Glass standard thickness: 3/8”, 1/2”, 5/8”, 3/4” Interlayer standard thickness: SGP: 0.035” , 0.06” PVB: 0.035”
	Picket	#6 Satin Powder Coat PVDF	Ø1/2” picket
	Perforated Metal		1” wide frame
	Laser Cut		1/4” thick aluminum
	Steel Wire Mesh Weld Applies for WM-38ST and WM-50ST wire mesh options.		1” wide frame
	Stainless Steel Wire Mesh Weld Applies for WM-38SS and WM-50SS wire mesh options.	#6 Satin	
	Stainless Steel Wire Mesh Woven Applies for WM-10SS, WM-11SS, WM-13SS and WM-14SS wire mesh options.		
	Multiline		Ø1/2” multiline
	CableNet		Ø1” frame, Ø1/16” (1.5mm) cable mesh
TOP RAIL/HAND RAIL	Stainless Steel Tube	#6 Satin (Recommended) Powder Coat PVDF	Ø1-1/2” or Ø2” for Hand Rail Ø1-1/2”, Ø2” or 2”x1” Rectangular Tube for Top Rail
	Stainless Steel Tube with LED [2]		Ø1-1/2” with LED LINEAR, Ø1-1/2” or Ø2” with LED POD
	Wood (Red Oak, Cherry or Maple) [3]	Unstained	Ø2”
	Wood (Red Oak, Cherry or Maple) with LED		Ø2” with LED LINEAR

Intertek

1. IBC 2015 & newer requires railing glass to be laminated. VIVA recommends SGP for exterior applications.
2. All LED LINEAR products are ETL certified; ETL mark is proof of product compliance to North American safety standard.
3. Other species available upon request.

151 W. Vista Ridge Mall Dr. Lewisville, TX 75067 | 972-353-8482 | info@vivarailings.com | vivarailings.com

BLADE RAILING SYSTEM
PERFORATED METAL INFILL

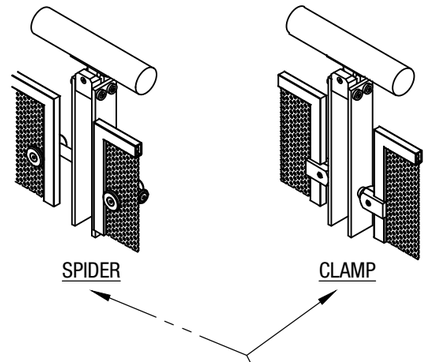

AVAILABLE PERFORATED TYPES

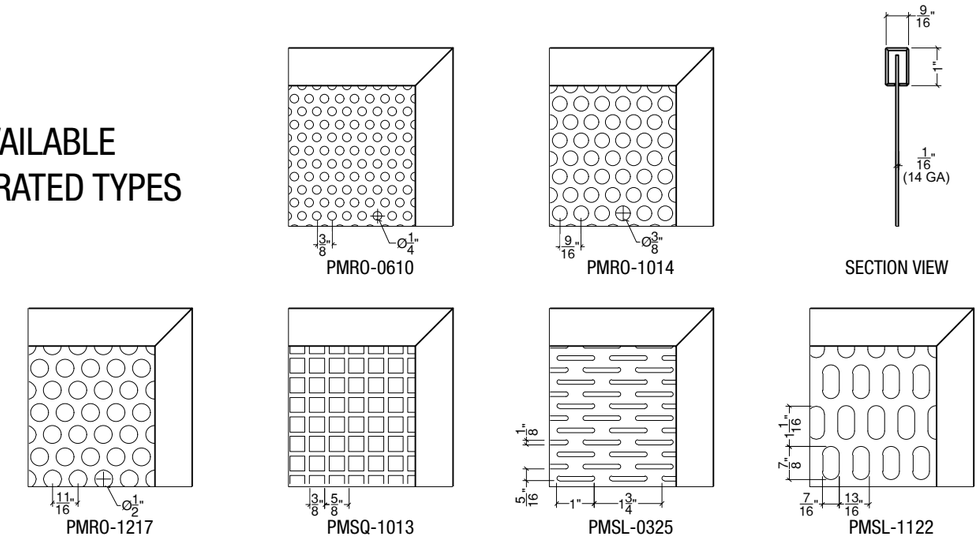

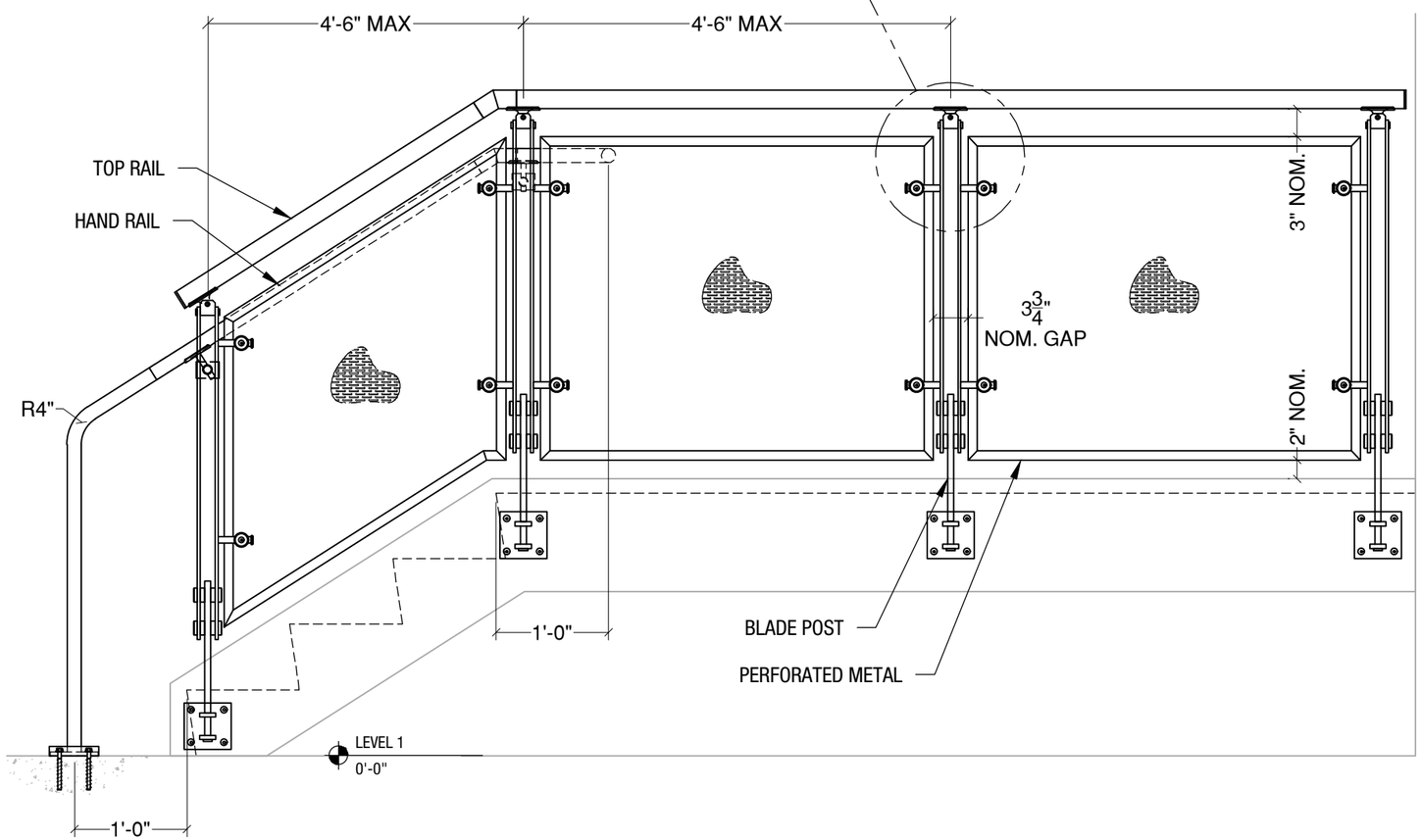

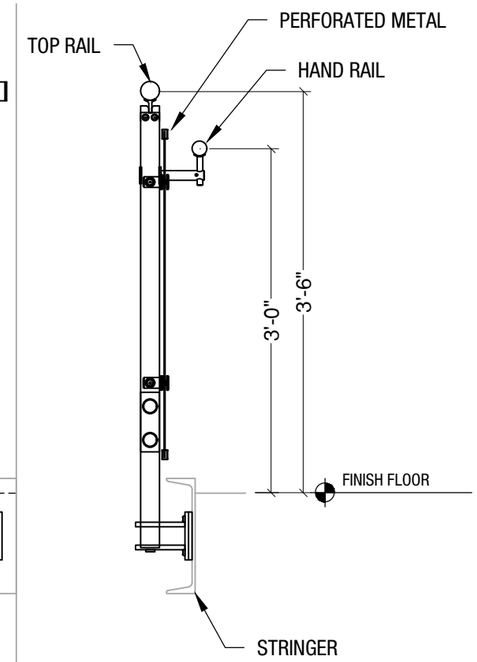

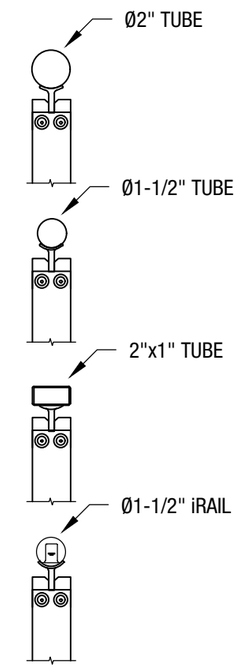

TOP RAIL OPTIONS

VIVA RAILINGS IS NOT RESPONSIBLE FOR THE STRUCTURAL INTEGRITY OF ANY BUILDING SYSTEMS OR OTHER MATERIALS NOT FURNISHED BY VIVA RAILINGS. VIVA RAILINGS HAS NO WAY OF KNOWING AND SPECIFICALLY DISCLAIMS WHETHER OR NOT THE BUILDING SYSTEMS TO WHICH VIVA RAILINGS' PRODUCTS ARE TO BE ATTACHED ARE STRUCTURALLY SOUND OR DESIGNED TO PROPERLY SUPPORT VIVA RAILINGS'S MATERIALS. ANY SUCH DESIGN RESPONSIBILITY BELONGS TO OTHERS FOR WHOM VIVA RAILINGS IS NOT RESPONSIBLE. THESE DRAWINGS ARE INTENDED FOR THE SOLE USE OF VIVA RAILINGS' CUSTOMER AND THEIR AGENTS FOR THE INSTALLATION OF PRODUCTS FURNISHED BY VIVA RAILINGS. VIVA RAILINGS REMAINS THE SOLE OWNER OF ALL DESIGNS AND INTELLECTUAL PROPERTY CONTAINED WITHIN. REPRODUCTION AND USE OF THESE DESIGNS FOR ANY OTHER PURPOSE IS FORBIDDEN. SCALES ARE PROVIDED FOR REFERENCE ONLY. FOR PRODUCT INFORMATION AND TECHNICAL SUPPORT, PLEASE CONTACT VIVA RAILINGS.

151 W. Vista Ridge Mall Dr. Lewisville, TX 75067 972-353-8482 info@vivarailings.com vivarailings.com

BLADE RAILING SYSTEM
GLASS INFILL

AVAILABLE GLASS TYPES

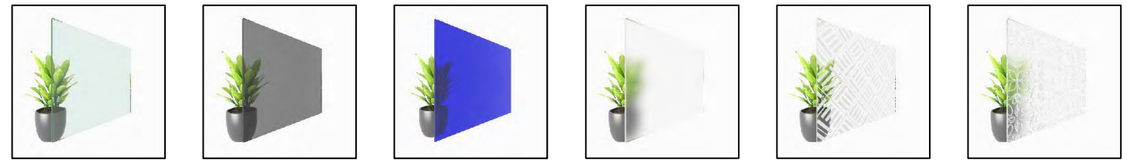

Clear Laminated (PVB or SGP) | Tinted | Colored Interlayer | Frosted | Ceramic Frit | Casted

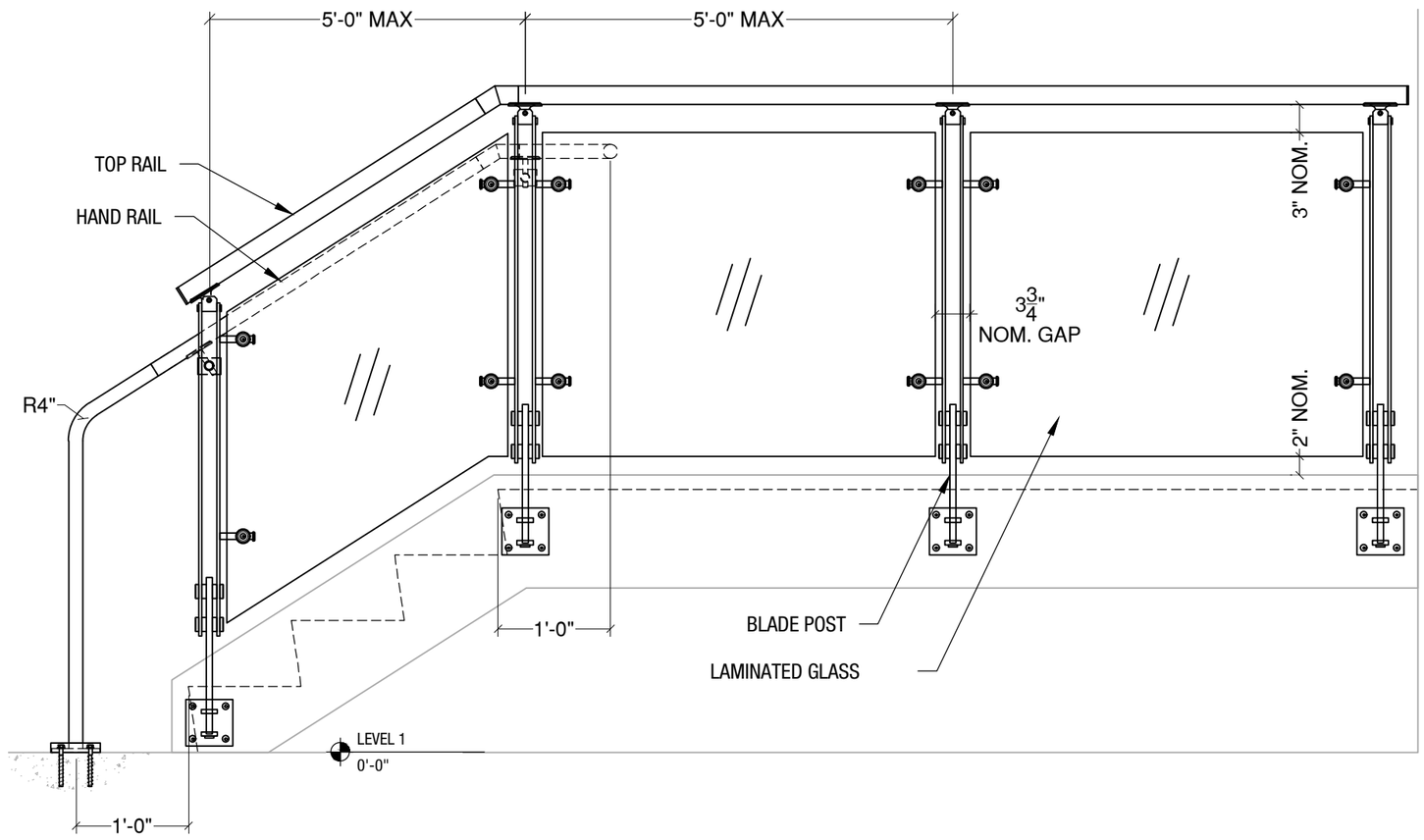

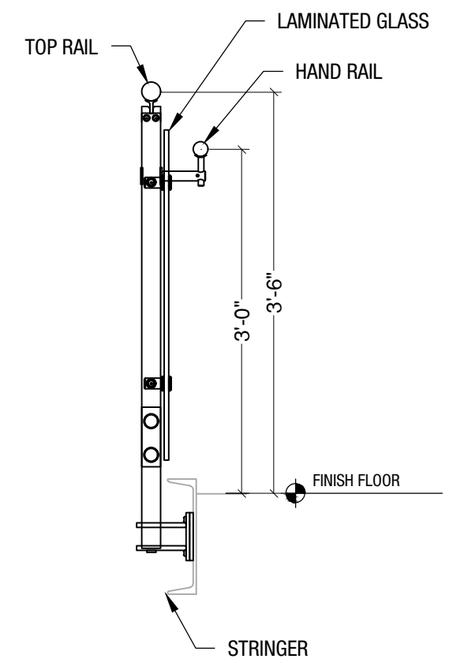

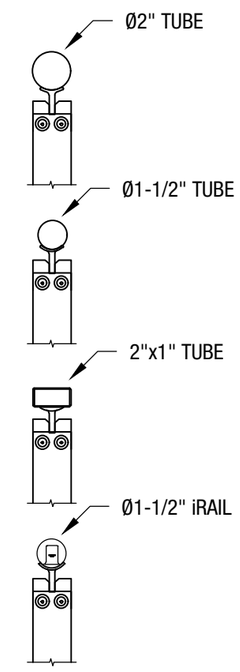

TOP RAIL OPTIONS

VIVA RAILINGS IS NOT RESPONSIBLE FOR THE STRUCTURAL INTEGRITY OF ANY BUILDING SYSTEMS OR OTHER MATERIALS NOT FURNISHED BY VIVA RAILINGS. VIVA RAILINGS HAS NO WAY OF KNOWING AND SPECIFICALLY DISCLAIMS WHETHER OR NOT THE BUILDING SYSTEMS TO WHICH VIVA RAILINGS' PRODUCTS ARE TO BE ATTACHED ARE STRUCTURALLY SOUND OR DESIGNED TO PROPERLY SUPPORT VIVA RAILINGS'S MATERIALS. ANY SUCH DESIGN RESPONSIBILITY BELONGS TO OTHERS FOR WHOM VIVA RAILINGS IS NOT RESPONSIBLE. THESE DRAWINGS ARE INTENDED FOR THE SOLE USE OF VIVA RAILINGS' CUSTOMER AND THEIR AGENTS FOR THE INSTALLATION OF PRODUCTS FURNISHED BY VIVA RAILINGS. VIVA RAILINGS REMAINS THE SOLE OWNER OF ALL DESIGNS AND INTELLECTUAL PROPERTY CONTAINED WITHIN. REPRODUCTION AND USE OF THESE DESIGNS FOR ANY OTHER PURPOSE IS FORBIDDEN. SCALES ARE PROVIDED FOR REFERENCE ONLY. FOR PRODUCT INFORMATION AND TECHNICAL SUPPORT, PLEASE CONTACT VIVA RAILINGS.

151 W. Vista Ridge Mall Dr. Lewisville, TX 75067 | 972-353-8482 | info@vivarailings.com | vivarailings.com

BLADE RAILING SYSTEM
WIRE MESH INFILL

AVAILABLE WIRE MESH TYPES

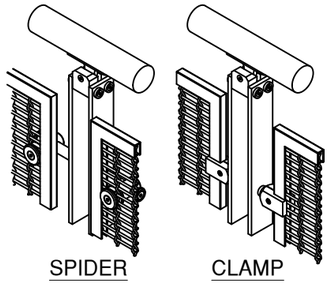

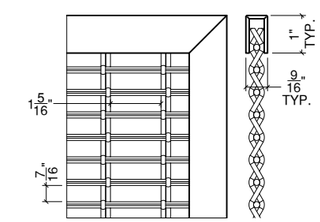

WM-10SS
(Woven SS)

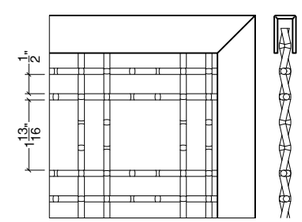

WM-13SS
(Woven SS)

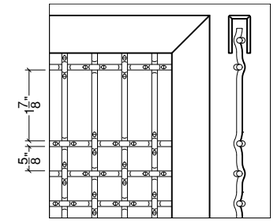

WM-17SS
(Woven SS)

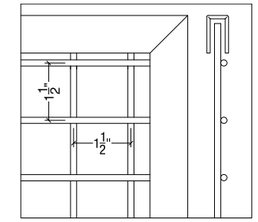

WM-38ST
(Welded Steel)

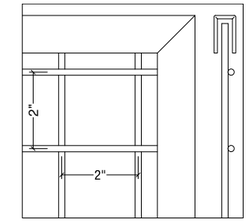

WM-50ST
(Welded Steel)

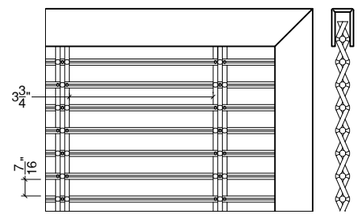

WM-11SS
(Woven SS)

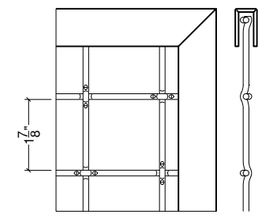

WM-14SS
(Woven SS)

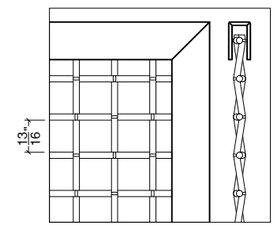

WM-20SS
(Woven SS)

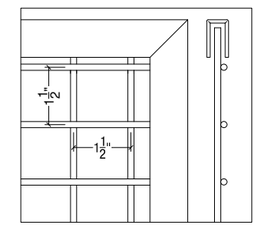

WM-38SS
(Welded Stainless Steel)

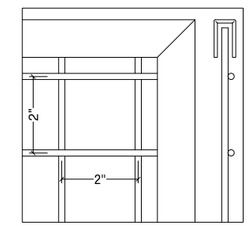

WM-50SS
(Welded Stainless Steel)

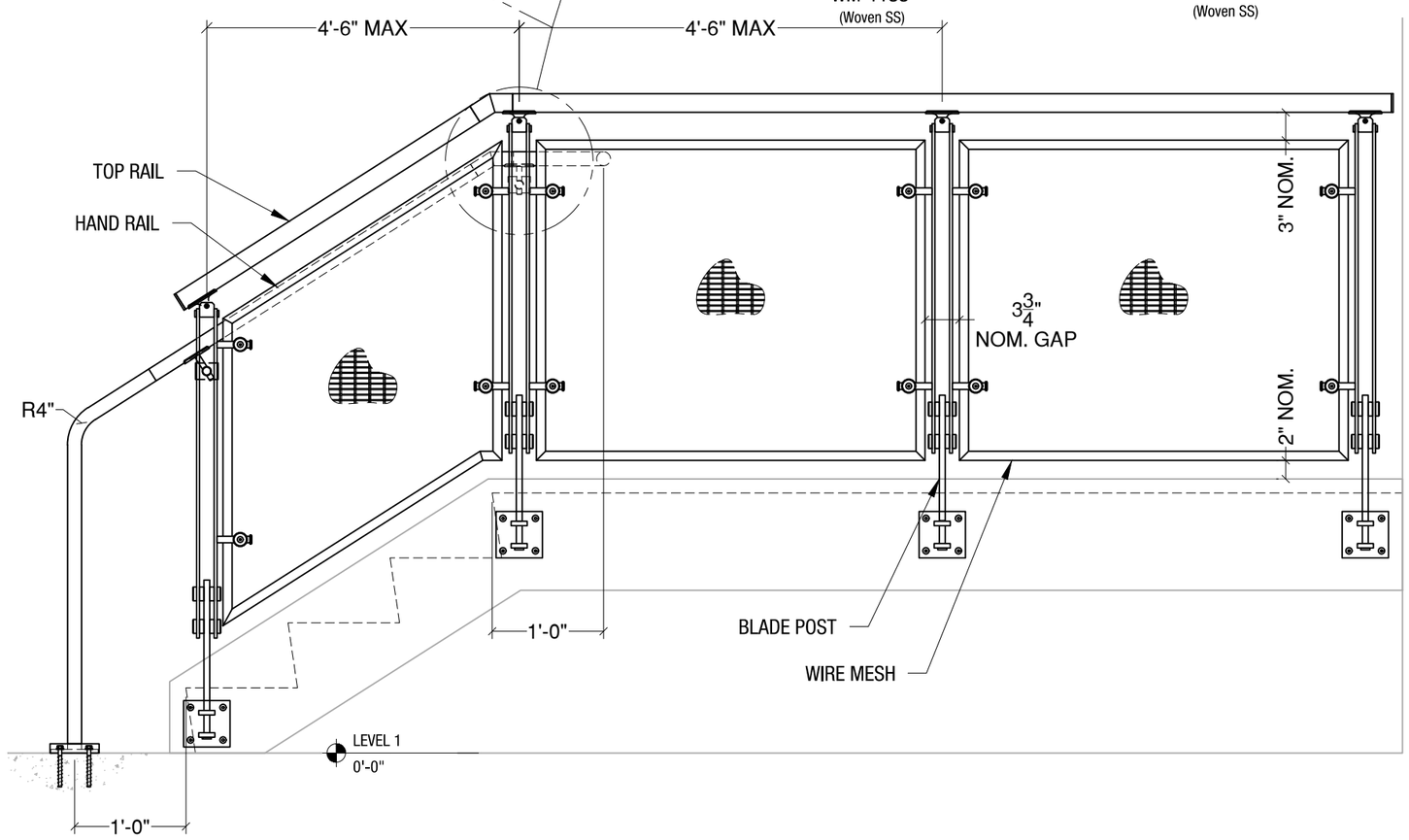

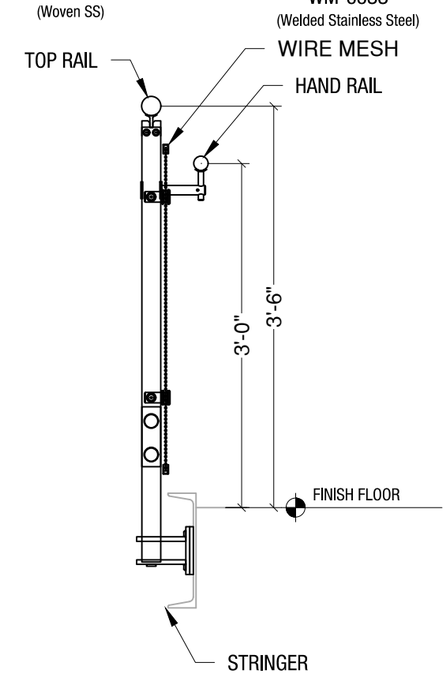

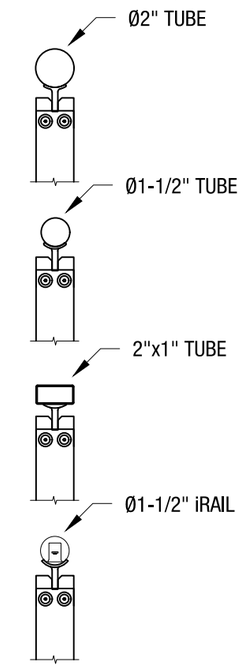

TOP RAIL OPTIONS

VIVA RAILINGS IS NOT RESPONSIBLE FOR THE STRUCTURAL INTEGRITY OF ANY BUILDING SYSTEMS OR OTHER MATERIALS NOT FURNISHED BY VIVA RAILINGS. VIVA RAILINGS HAS NO WAY OF KNOWING AND SPECIFICALLY DISCLAIMS WHETHER OR NOT THE BUILDING SYSTEMS TO WHICH VIVA RAILINGS' PRODUCTS ARE TO BE ATTACHED ARE STRUCTURALLY SOUND OR DESIGNED TO PROPERLY SUPPORT VIVA RAILINGS'S MATERIALS. ANY SUCH DESIGN RESPONSIBILITY BELONGS TO OTHERS FOR WHOM VIVA RAILINGS IS NOT RESPONSIBLE. THESE DRAWINGS ARE INTENDED FOR THE SOLE USE OF VIVA RAILINGS' CUSTOMER AND THEIR AGENTS FOR THE INSTALLATION OF PRODUCTS FURNISHED BY VIVA RAILINGS. VIVA RAILINGS REMAINS THE SOLE OWNER OF ALL DESIGNS AND INTELLECTUAL PROPERTY CONTAINED WITHIN. REPRODUCTION AND USE OF THESE DESIGNS FOR ANY OTHER PURPOSE IS FORBIDDEN. SCALES ARE PROVIDED FOR REFERENCE ONLY. FOR PRODUCT INFORMATION AND TECHNICAL SUPPORT, PLEASE CONTACT VIVA RAILINGS.

151 W. Vista Ridge Mall Dr. Lewisville, TX 75067 | 972-353-8482 | info@vivarailings.com | vivarailings.com

BLADE RAILING SYSTEM
PICKET PANEL INFILL

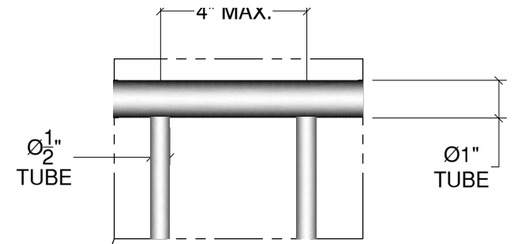

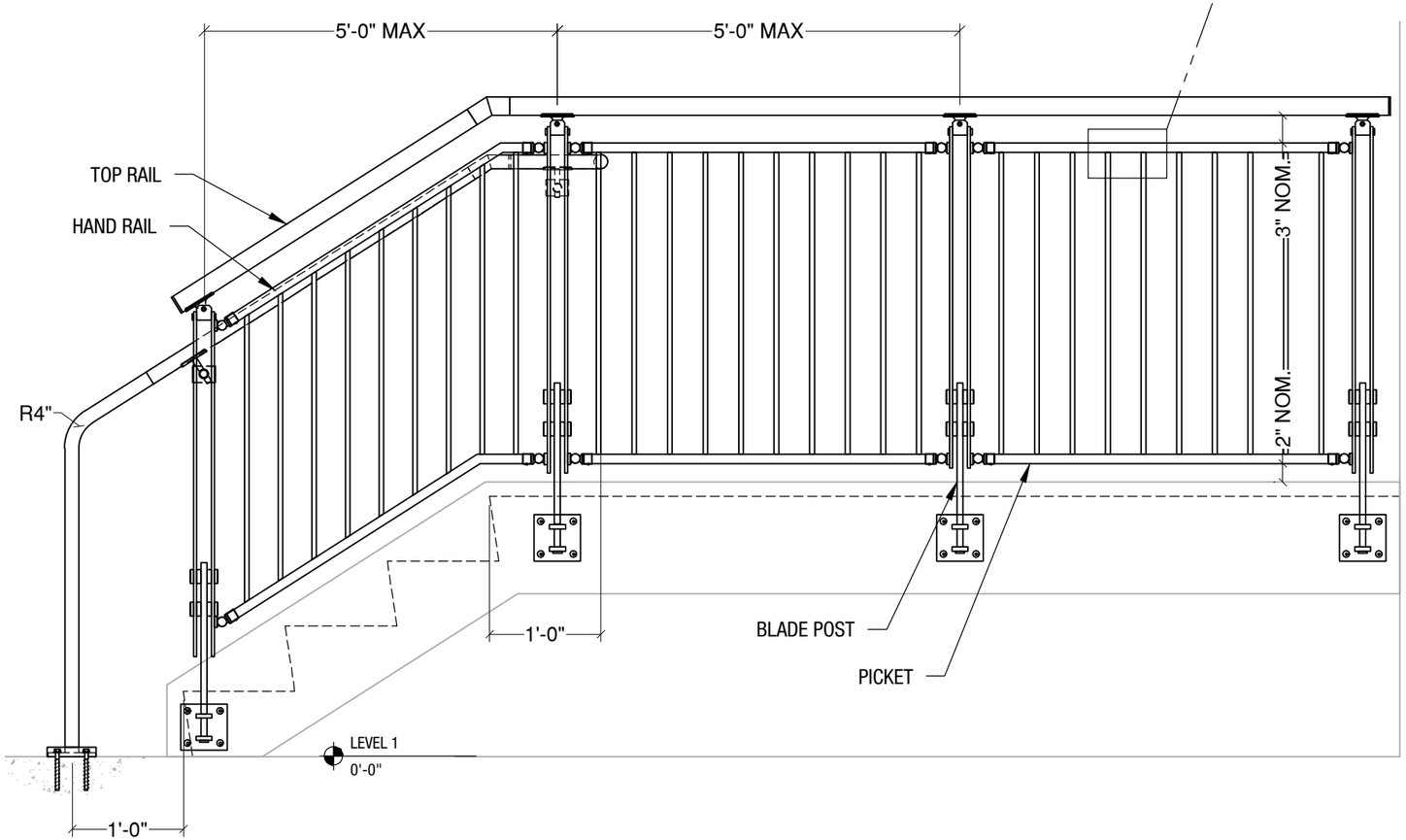

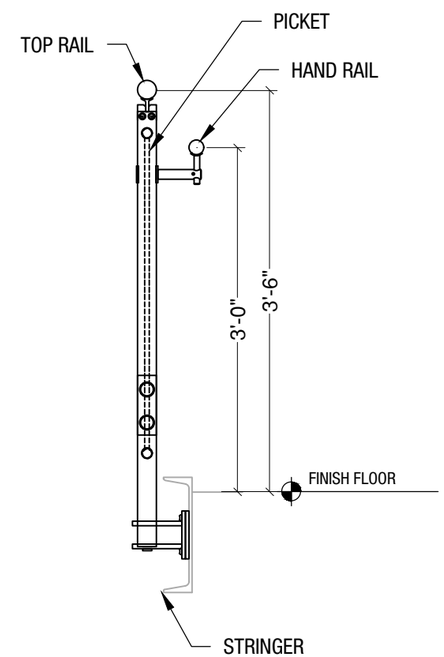

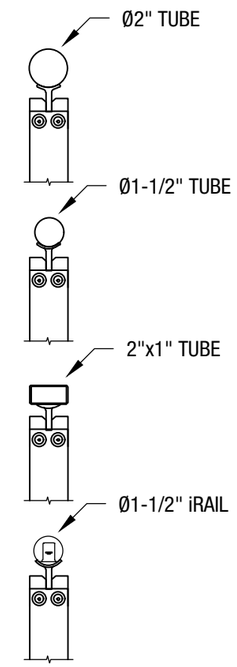

TOP RAIL OPTIONS

VIVA RAILINGS IS NOT RESPONSIBLE FOR THE STRUCTURAL INTEGRITY OF ANY BUILDING SYSTEMS OR OTHER MATERIALS NOT FURNISHED BY VIVA RAILINGS. VIVA RAILINGS HAS NO WAY OF KNOWING AND SPECIFICALLY DISCLAIMS WHETHER OR NOT THE BUILDING SYSTEMS TO WHICH VIVA RAILINGS' PRODUCTS ARE TO BE ATTACHED ARE STRUCTURALLY SOUND OR DESIGNED TO PROPERLY SUPPORT VIVA RAILINGS'S MATERIALS. ANY SUCH DESIGN RESPONSIBILITY BELONGS TO OTHERS FOR WHOM VIVA RAILINGS IS NOT RESPONSIBLE. THESE DRAWINGS ARE INTENDED FOR THE SOLE USE OF VIVA RAILINGS' CUSTOMER AND THEIR AGENTS FOR THE INSTALLATION OF PRODUCTS FURNISHED BY VIVA RAILINGS. VIVA RAILINGS REMAINS THE SOLE OWNER OF ALL DESIGNS AND INTELLECTUAL PROPERTY CONTAINED WITHIN. REPRODUCTION AND USE OF THESE DESIGNS FOR ANY OTHER PURPOSE IS FORBIDDEN. SCALES ARE PROVIDED FOR REFERENCE ONLY. FOR PRODUCT INFORMATION AND TECHNICAL SUPPORT, PLEASE CONTACT VIVA RAILINGS.

151 W. Vista Ridge Mall Dr. Lewisville, TX 75067 | 972-353-8482 | info@vivarailings.com | vivarailings.com

BLADE RAILING SYSTEM
MULTILINE INFILL

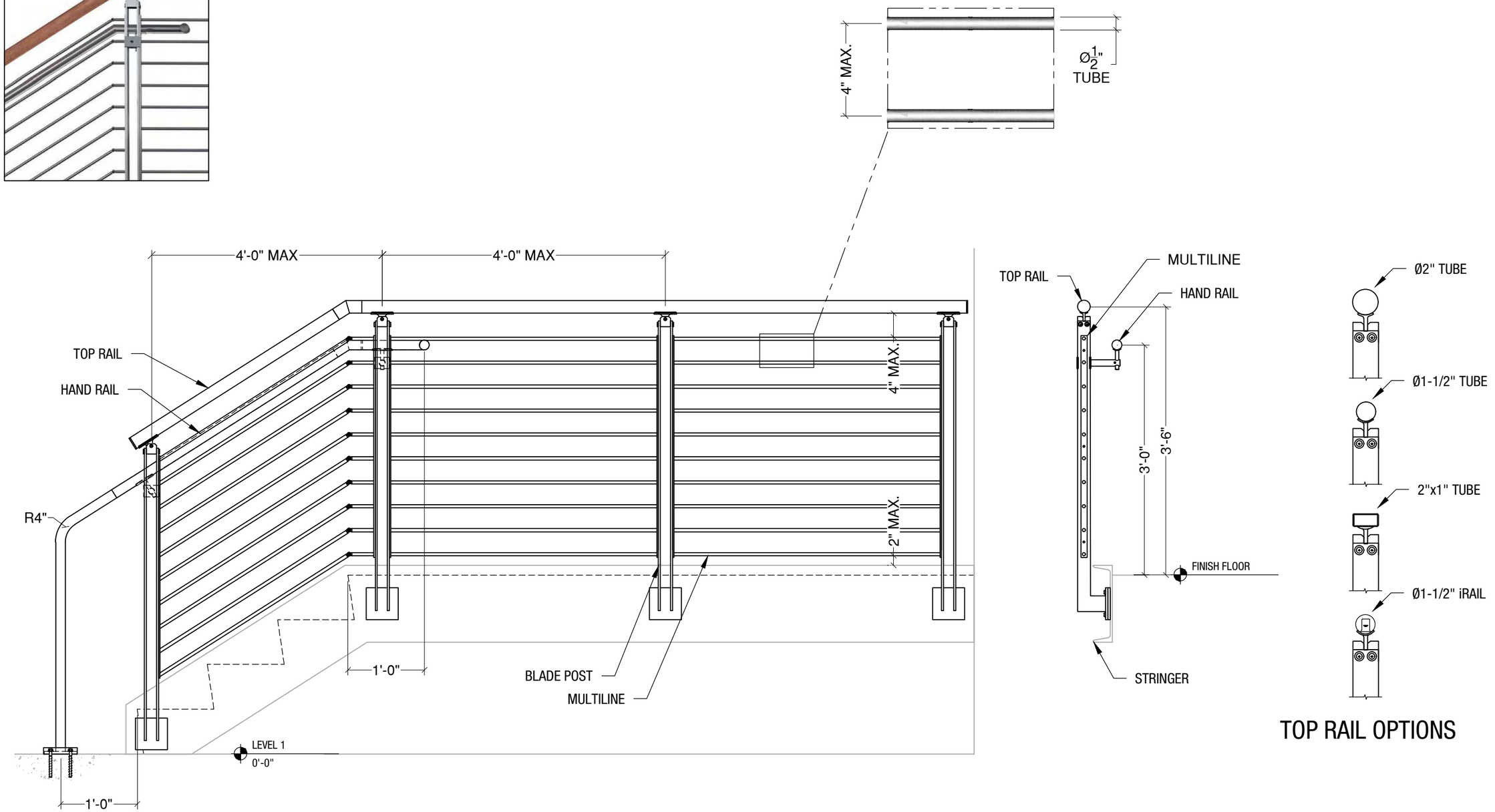

TOP RAIL OPTIONS

VIVA RAILINGS IS NOT RESPONSIBLE FOR THE STRUCTURAL INTEGRITY OF ANY BUILDING SYSTEMS OR OTHER MATERIALS NOT FURNISHED BY VIVA RAILINGS. VIVA RAILINGS HAS NO WAY OF KNOWING AND SPECIFICALLY DISCLAIMS WHETHER OR NOT THE BUILDING SYSTEMS TO WHICH VIVA RAILINGS' PRODUCTS ARE TO BE ATTACHED ARE STRUCTURALLY SOUND OR DESIGNED TO PROPERLY SUPPORT VIVA RAILINGS'S MATERIALS. ANY SUCH DESIGN RESPONSIBILITY BELONGS TO OTHERS FOR WHOM VIVA RAILINGS IS NOT RESPONSIBLE. THESE DRAWINGS ARE INTENDED FOR THE SOLE USE OF VIVA RAILINGS' CUSTOMER AND THEIR AGENTS FOR THE INSTALLATION OF PRODUCTS FURNISHED BY VIVA RAILINGS. VIVA RAILINGS REMAINS THE SOLE OWNER OF ALL DESIGNS AND INTELLECTUAL PROPERTY CONTAINED WITHIN. REPRODUCTION AND USE OF THESE DESIGNS FOR ANY OTHER PURPOSE IS FORBIDDEN. SCALES ARE PROVIDED FOR REFERENCE ONLY. FOR PRODUCT INFORMATION AND TECHNICAL SUPPORT, PLEASE CONTACT VIVA RAILINGS.

151 W. Vista Ridge Mall Dr. Lewisville, TX 75067 972-353-8482 info@vivarailings.com vivarailings.com

BLADE RAILING SYSTEM
CABLENET INFILL

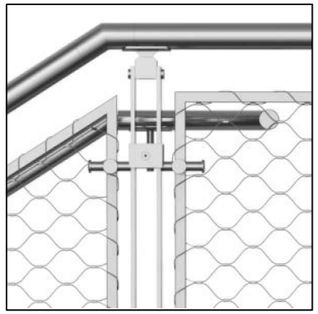

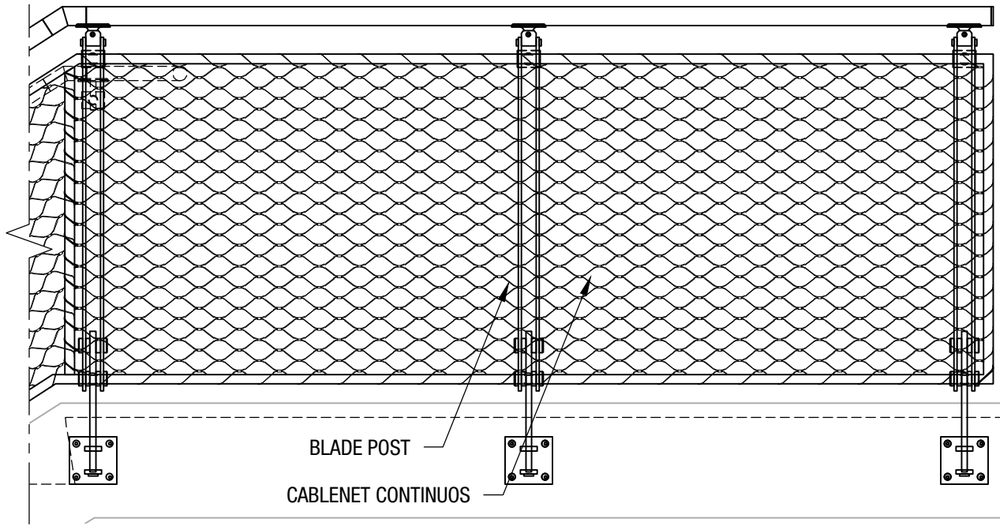

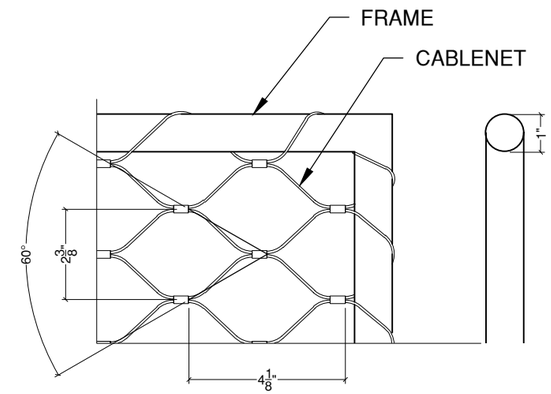

DIMENSIONS ARE NOMINAL

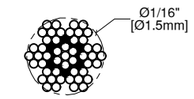

7x7 CONSTRUCTION CABLE

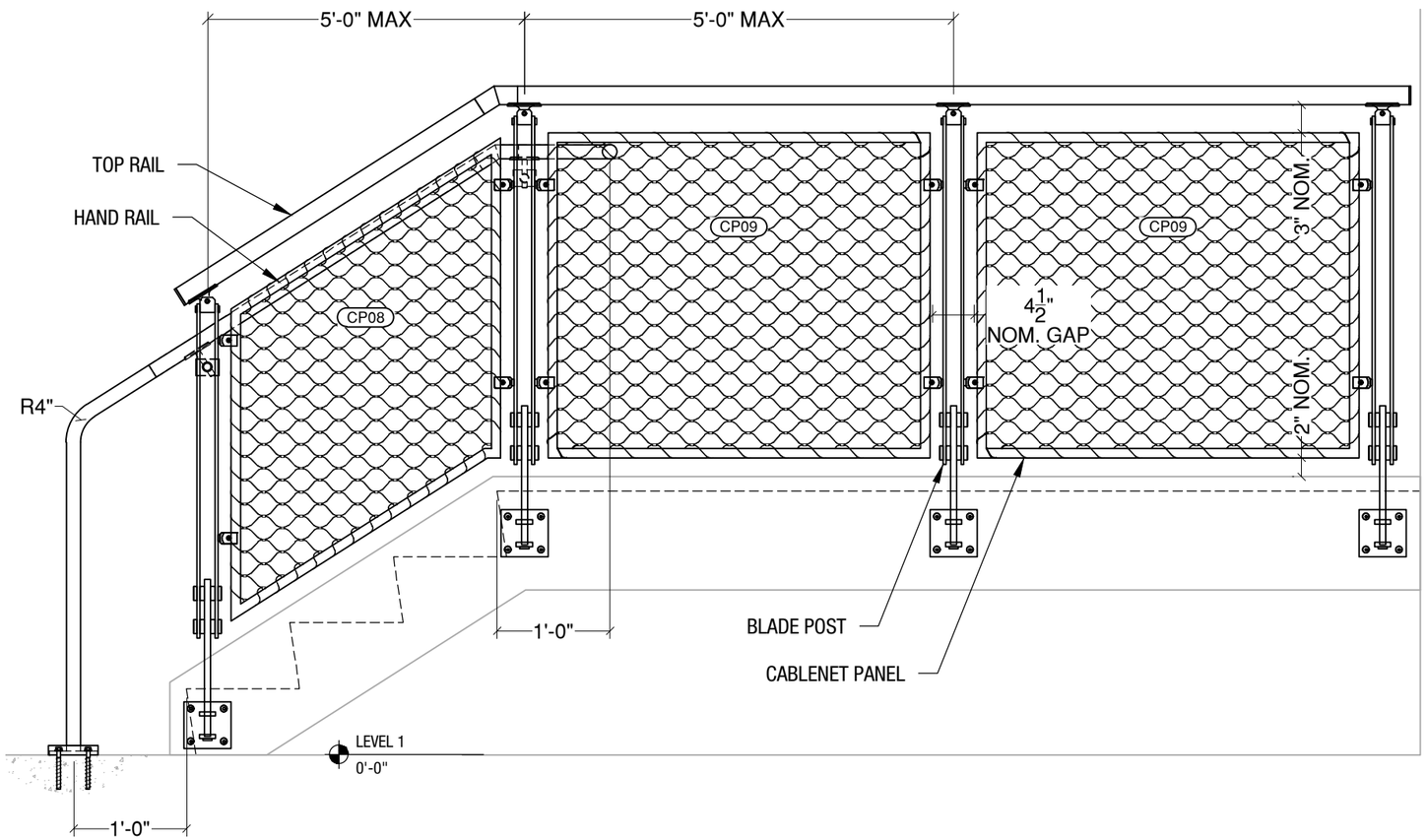

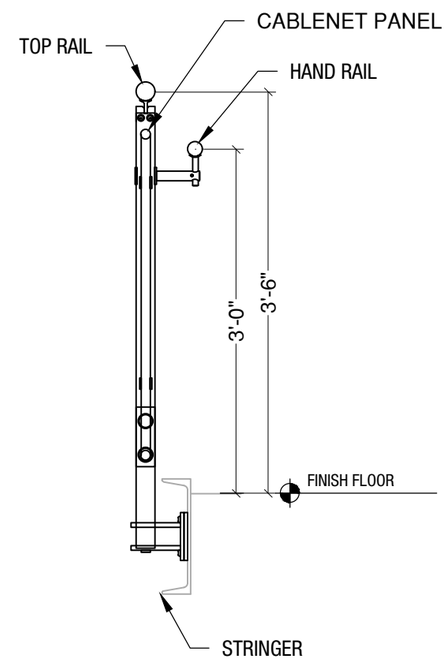

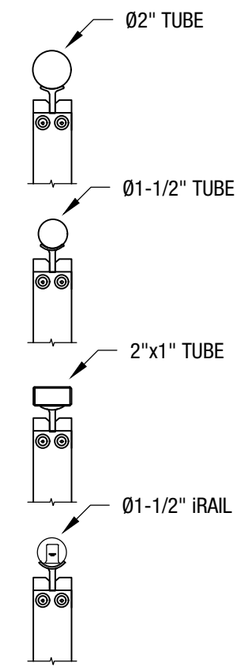

TOP RAIL OPTIONS

VIVA RAILINGS IS NOT RESPONSIBLE FOR THE STRUCTURAL INTEGRITY OF ANY BUILDING SYSTEMS OR OTHER MATERIALS NOT FURNISHED BY VIVA RAILINGS. VIVA RAILINGS HAS NO WAY OF KNOWING AND SPECIFICALLY DISCLAIMS WHETHER OR NOT THE BUILDING SYSTEMS TO WHICH VIVA RAILINGS' PRODUCTS ARE TO BE ATTACHED ARE STRUCTURALLY SOUND OR DESIGNED TO PROPERLY SUPPORT VIVA RAILINGS'S MATERIALS. ANY SUCH DESIGN RESPONSIBILITY BELONGS TO OTHERS FOR WHOM VIVA RAILINGS IS NOT RESPONSIBLE. THESE DRAWINGS ARE INTENDED FOR THE SOLE USE OF VIVA RAILINGS' CUSTOMER AND THEIR AGENTS FOR THE INSTALLATION OF PRODUCTS FURNISHED BY VIVA RAILINGS. VIVA RAILINGS REMAINS THE SOLE OWNER OF ALL DESIGNS AND INTELLECTUAL PROPERTY CONTAINED WITHIN. REPRODUCTION AND USE OF THESE DESIGNS FOR ANY OTHER PURPOSE IS FORBIDDEN. SCALES ARE PROVIDED FOR REFERENCE ONLY. FOR PRODUCT INFORMATION AND TECHNICAL SUPPORT, PLEASE CONTACT VIVA RAILINGS.

151 W. Vista Ridge Mall Dr. Lewisville, TX 75067 | 972-353-8482 | info@vivarailings.com | vivarailings.com

BLADE RAILING SYSTEM
LASER CUT INFILL

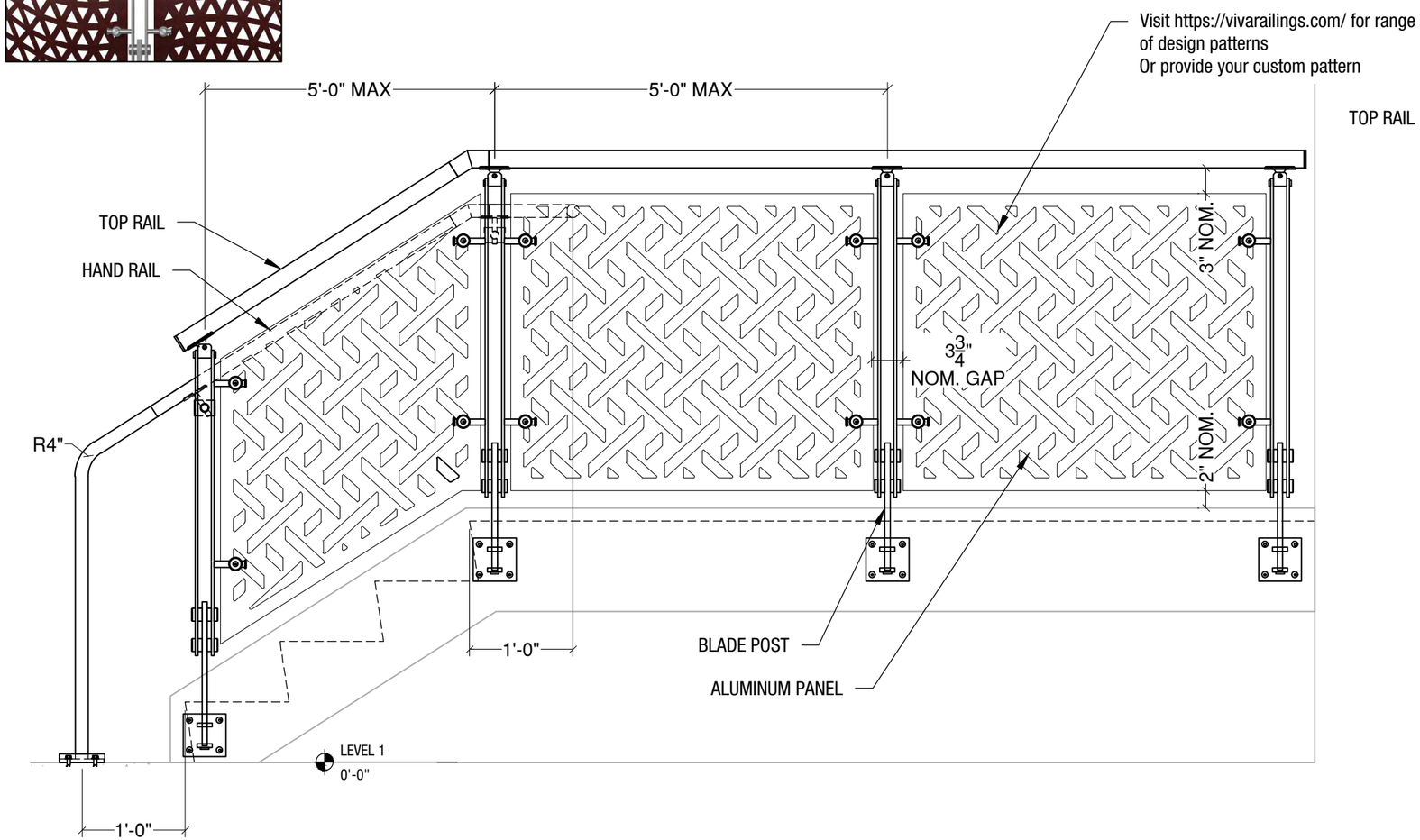

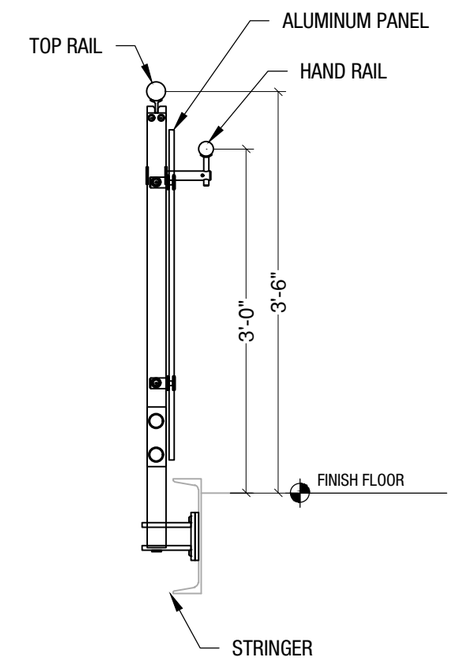

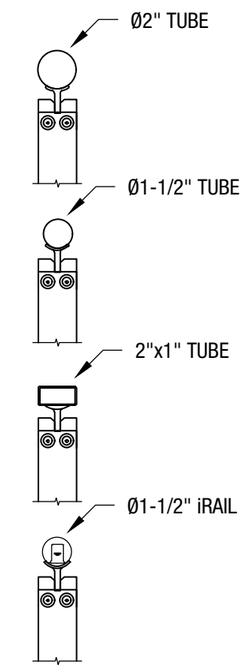

TOP RAIL OPTIONS

VIVA RAILINGS IS NOT RESPONSIBLE FOR THE STRUCTURAL INTEGRITY OF ANY BUILDING SYSTEMS OR OTHER MATERIALS NOT FURNISHED BY VIVA RAILINGS. VIVA RAILINGS HAS NO WAY OF KNOWING AND SPECIFICALLY DISCLAIMS WHETHER OR NOT THE BUILDING SYSTEMS TO WHICH VIVA RAILINGS' PRODUCTS ARE TO BE ATTACHED ARE STRUCTURALLY SOUND OR DESIGNED TO PROPERLY SUPPORT VIVA RAILINGS'S MATERIALS. ANY SUCH DESIGN RESPONSIBILITY BELONGS TO OTHERS FOR WHOM VIVA RAILINGS IS NOT RESPONSIBLE. THESE DRAWINGS ARE INTENDED FOR THE SOLE USE OF VIVA RAILINGS' CUSTOMER AND THEIR AGENTS FOR THE INSTALLATION OF PRODUCTS FURNISHED BY VIVA RAILINGS. VIVA RAILINGS REMAINS THE SOLE OWNER OF ALL DESIGNS AND INTELLECTUAL PROPERTY CONTAINED WITHIN. REPRODUCTION AND USE OF THESE DESIGNS FOR ANY OTHER PURPOSE IS FORBIDDEN. SCALES ARE PROVIDED FOR REFERENCE ONLY. FOR PRODUCT INFORMATION AND TECHNICAL SUPPORT, PLEASE CONTACT VIVA RAILINGS.

151 W. Vista Ridge Mall Dr. Lewisville, TX 75067 972-353-8482 info@vivarailings.com vivarailings.com

BLADE PERF METAL RAILING SYSTEM

BLADE RAILING SYSTEM

MOUNTING CONDITION, TOP MOUNTED POST

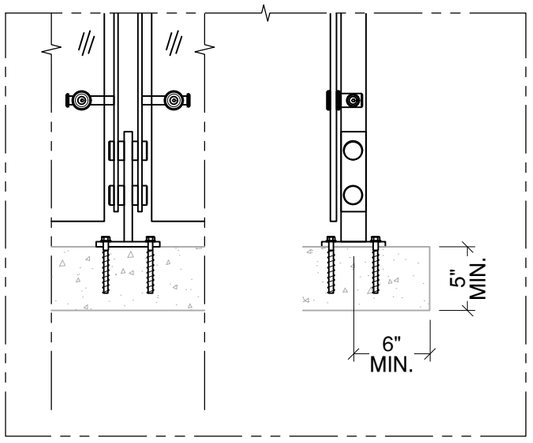

Anchored to Concrete [1] - $ [2]

Detail# BL-T01 [3]

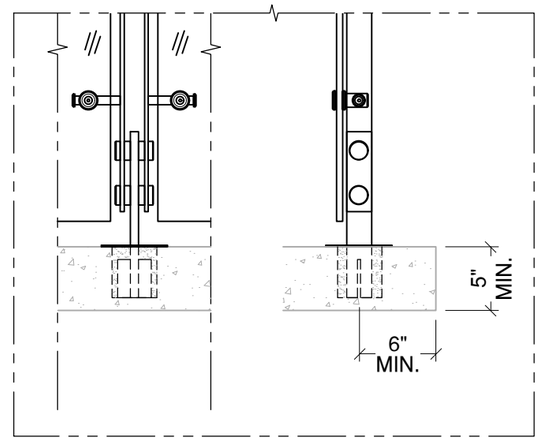

Cored into Concrete - $$

Detail# BL-T02

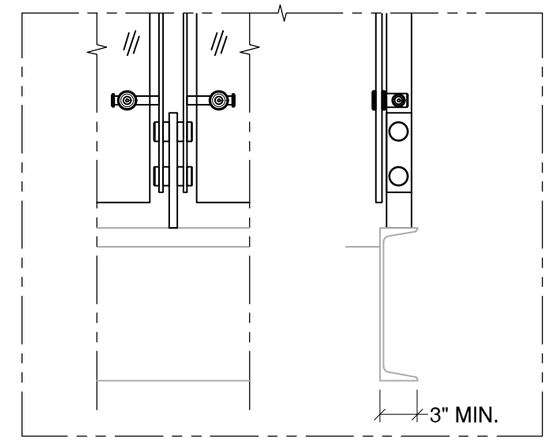

Welded @ Steel Channel - $

Detail# BL-T03

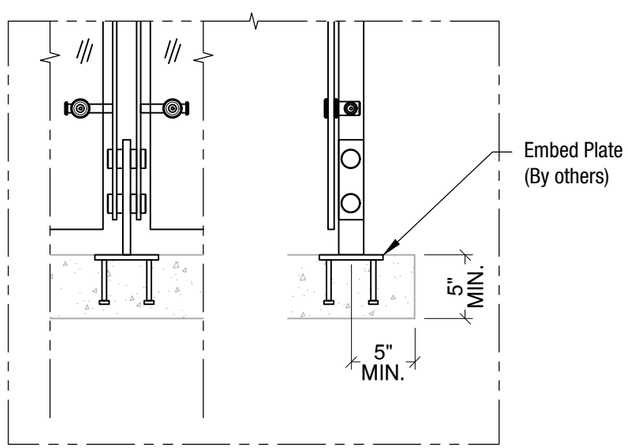

Welded @ Embed Plate - $

Detail# BL-T04

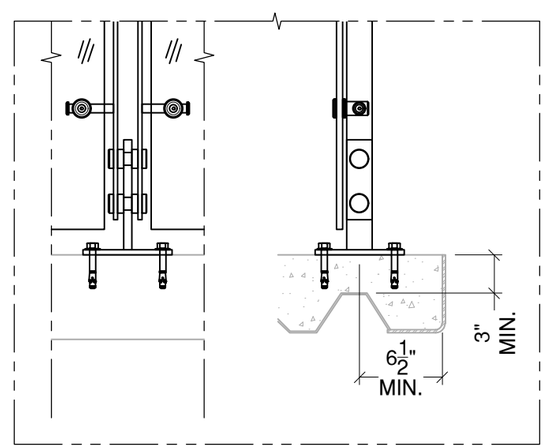

Anchored to Concrete Slab on Deck - $$

Detail# BL-T05

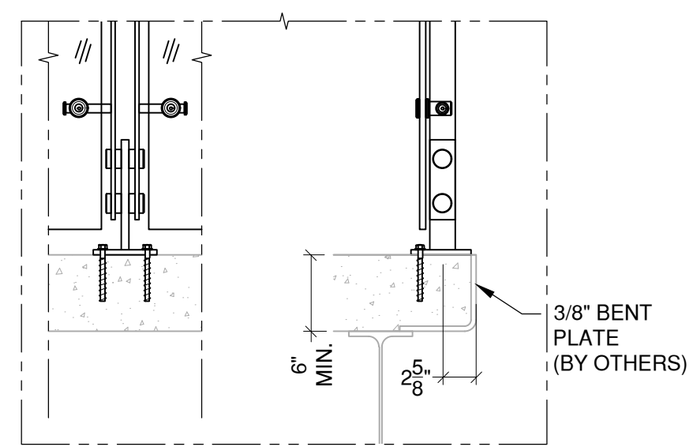

Anchored to Concrete
Welded to Steel Plate - $

Detail# BL-T06

(1) Min. 4000 PSI concrete, Typ.
(2) $ to $$$: Indicates mounting type comparative cost
(3) Bolting is not a available option for top mount with cable infill

VIVA RAILINGS IS NOT RESPONSIBLE FOR THE STRUCTURAL INTEGRITY OF ANY BUILDING SYSTEMS OR OTHER MATERIALS NOT FURNISHED BY VIVA RAILINGS. VIVA RAILINGS HAS NO WAY OF KNOWING AND SPECIFICALLY DISCLAIMS WHETHER OR NOT THE BUILDING SYSTEMS TO WHICH VIVA RAILINGS' PRODUCTS ARE TO BE ATTACHED ARE STRUCTURALLY SOUND OR DESIGNED TO PROPERLY SUPPORT VIVA RAILINGS'S MATERIALS. ANY SUCH DESIGN RESPONSIBILITY BELONGS TO OTHERS FOR WHOM VIVA RAILINGS IS NOT RESPONSIBLE. THESE DRAWINGS ARE INTENDED FOR THE SOLE USE OF VIVA RAILINGS' CUSTOMER AND THEIR AGENTS FOR THE INSTALLATION OF PRODUCTS FURNISHED BY VIVA RAILINGS. VIVA RAILINGS REMAINS THE SOLE OWNER OF ALL DESIGNS AND INTELLECTUAL PROPERTY CONTAINED WITHIN. REPRODUCTION AND USE OF THESE DESIGNS FOR ANY OTHER PURPOSE IS FORBIDDEN. SCALES ARE PROVIDED FOR REFERENCE ONLY. FOR PRODUCT INFORMATION AND TECHNICAL SUPPORT, PLEASE CONTACT VIVA RAILINGS.

151 W. Vista Ridge Mall Dr. Lewisville, TX 75067 972-353-8482 info@vivarailings.com vivarailings.com

BLADE RAILING SYSTEM

MOUNTING CONDITION, FASCIA MOUNTED POST

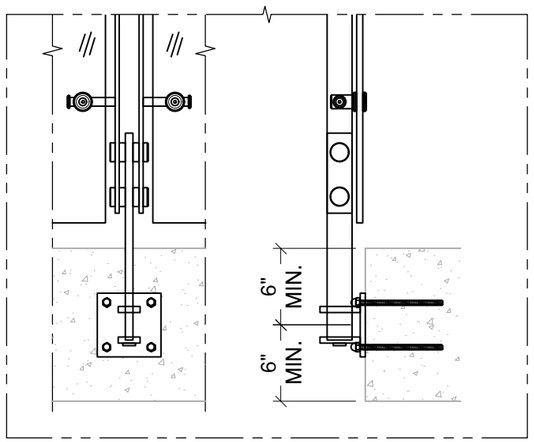

Anchored to Concrete [1] - $$$

Detail# BL-F01

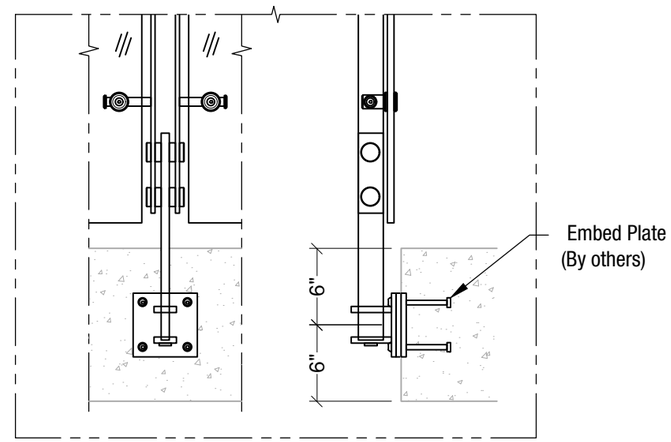

Welded @ Embed Plate - $$

Detail# BL-F02

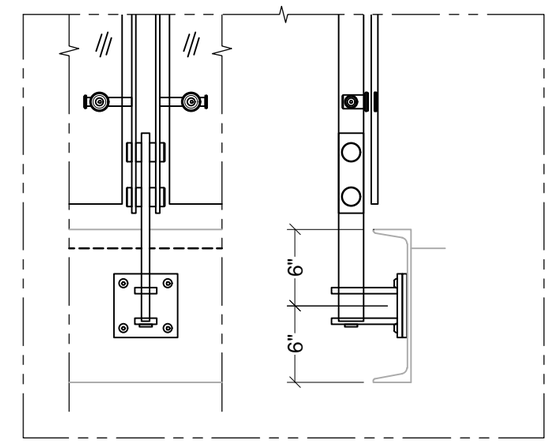

Welded @ Steel Channel - $$

Detail# BL-F03

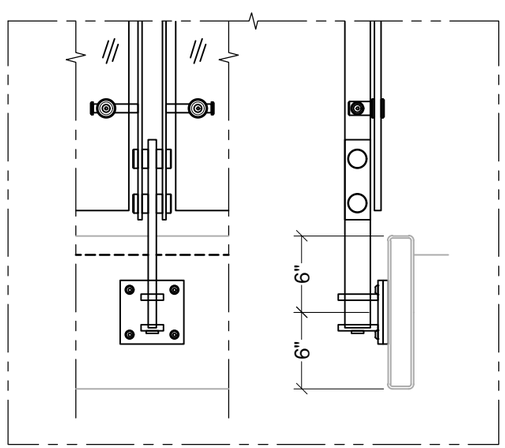

Welded @ Steel Tube - $$

Detail# BL-F04

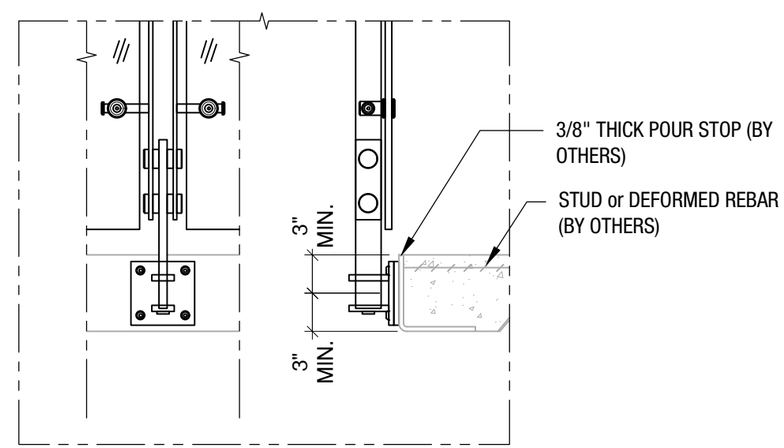

Welded @ Pour Stop - $$

Detail# BL-F05

(1) Min. 4000 PSI concrete, Typ.

VIVA RAILINGS IS NOT RESPONSIBLE FOR THE STRUCTURAL INTEGRITY OF ANY BUILDING SYSTEMS OR OTHER MATERIALS NOT FURNISHED BY VIVA RAILINGS. VIVA RAILINGS HAS NO WAY OF KNOWING AND SPECIFICALLY DISCLAIMS WHETHER OR NOT THE BUILDING SYSTEMS TO WHICH VIVA RAILINGS' PRODUCTS ARE TO BE ATTACHED ARE STRUCTURALLY SOUND OR DESIGNED TO PROPERLY SUPPORT VIVA RAILINGS'S MATERIALS. ANY SUCH DESIGN RESPONSIBILITY BELONGS TO OTHERS FOR WHOM VIVA RAILINGS IS NOT RESPONSIBLE. THESE DRAWINGS ARE INTENDED FOR THE SOLE USE OF VIVA RAILINGS' CUSTOMER AND THEIR AGENTS FOR THE INSTALLATION OF PRODUCTS FURNISHED BY VIVA RAILINGS. VIVA RAILINGS REMAINS THE SOLE OWNER OF ALL DESIGNS AND INTELLECTUAL PROPERTY CONTAINED WITHIN. REPRODUCTION AND USE OF THESE DESIGNS FOR ANY OTHER PURPOSE IS FORBIDDEN. SCALES ARE PROVIDED FOR REFERENCE ONLY. FOR PRODUCT INFORMATION AND TECHNICAL SUPPORT, PLEASE CONTACT VIVA RAILINGS.

151 W. Vista Ridge Mall Dr. Lewisville, TX 75067 | 972-353-8482 | info@vivarailings.com | vivarailings.com

BLADE RAILING SYSTEM

ILLUMINATED RAILING

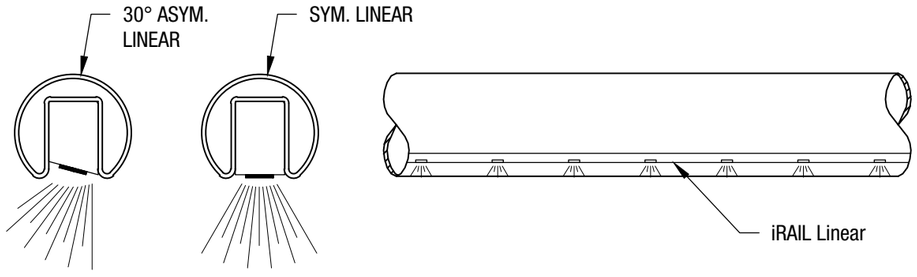

iRAIL LINEAR ORIENTATION OPTIONS

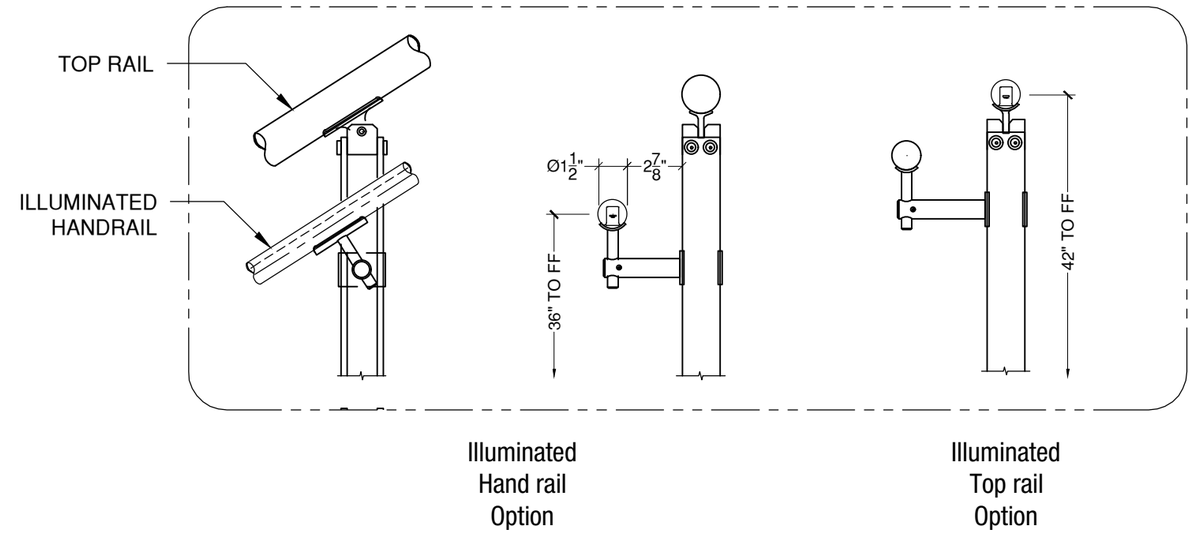

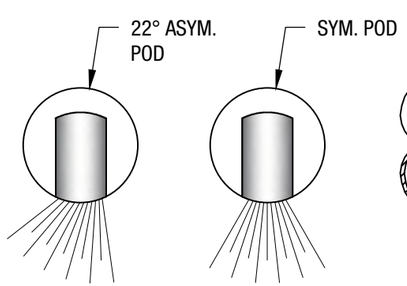

iRAIL POD ORIENTATION OPTIONS

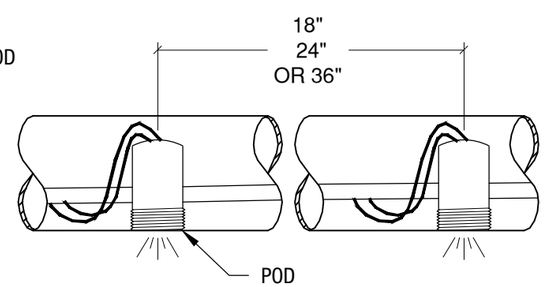

iRAIL POD SPACING OPTIONS

iRAIL LIGHTED RAILING SYSTEM

151 W. Vista Ridge Mall Dr. Lewisville, TX 75067 972-353-8482 info@vivarailings.com vivarailings.com

BLADE RAILING SYSTEM

FINISHING OPTIONS

#6 Satin

Powder Coat

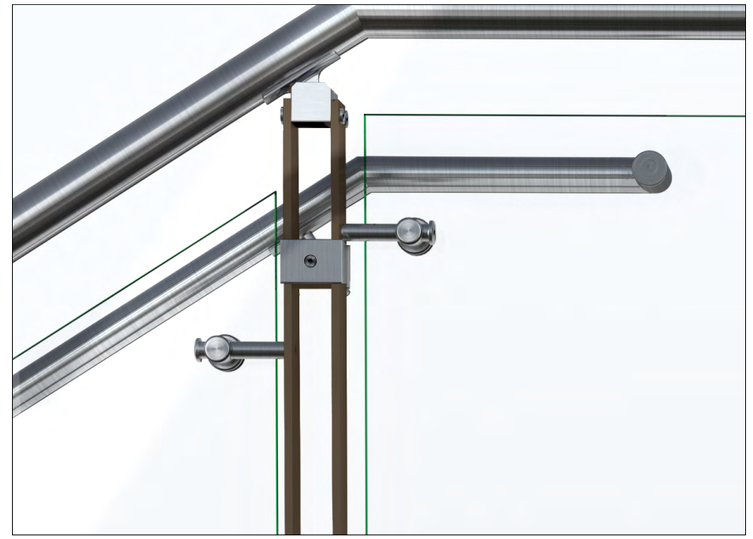

Powder coating is an environmentally-friendly option because it doesn't rely on solvents or chemical carriers. Instead, an electrostatic charge holds the paint to the steel, thus eliminating VOC emissions which will help in regards to LEED requirements. In addition, it meets AAMA specifications. Powder coating is durable and scratch resistant so it weathers and retains its original hue better than conventional liquid coatings.*

PDF

POWDER COAT FINISHING OPTIONS

The digital swatches of our powder coat colors may not accurately represent the actual real-life samples. Factors such as monitor settings, lighting conditions, and individual perception can affect the colors you see on your screen. We suggest using the swatches as a general reference for color, shade, and hue, rather than expecting an exact match. For the most precise color selection, we recommend requesting physical samples or visiting our office in Lewisville, TX to evaluate the powder coat colors in person.

Please note that while we offer a diverse range of standard powder coat colors to complement our products, any selections outside of these standard options may incur additional costs. We encourage you to consult with our specialists to explore all available options and make the best decision for your project needs.

BLADE PERF METAL RAILING SYSTEM
HEB ISD CAREER CENTER

H.E.B. ISD CAREER TRAINING CENTER - BEDFORD, TX

General Contractor: Lee Lewis Construction

Architect: Huckabee, Inc.

151 W. Vista Ridge Mall Dr. Lewisville, TX 75067 972-353-8482 info@vivarailings.com vivarailings.com

BLADE PERF METAL RAILING SYSTEM
JM FAMILY HEADQUARTERS

JM FAMILY HEADQUARTERS - DEERFIELD BEACH, FL

General Contractor: Kaufman Lynn Construction

Architect: PGAL Architects

BLADE GLASS RAILING SYSTEM
OFFICES AT KIMBALL PARK

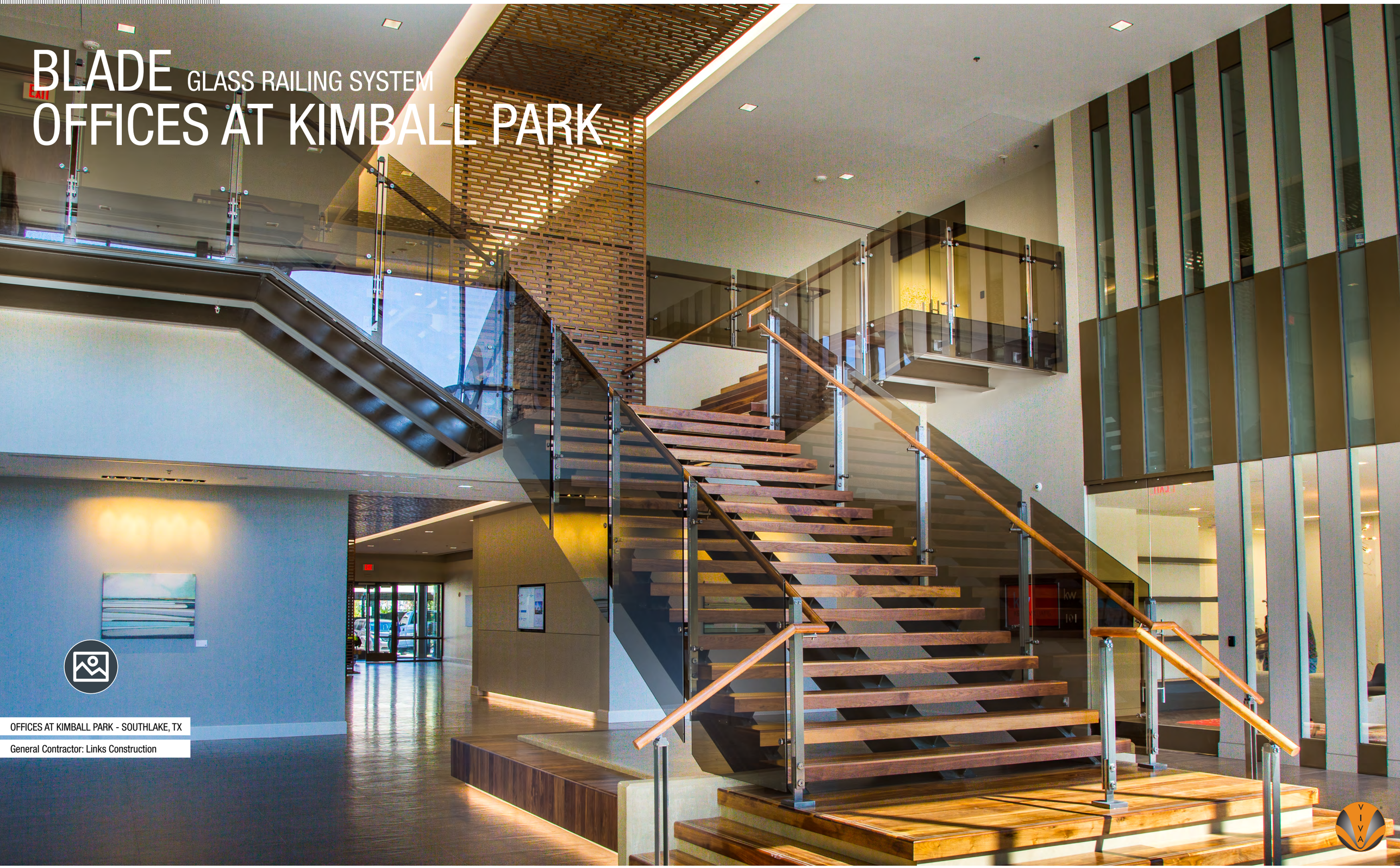

OFFICES AT KIMBALL PARK - SOUTHLAKE, TX

General Contractor: Links Construction

151 W. Vista Ridge Mall Dr. Lewisville, TX 75067 972-353-8482 info@vivarailings.com vivarailings.com

BLADE GLASS RAILING SYSTEM
THE TERRACES AT SOLANA

THE TERRACES AT SOLANA - WESTLAKE, TX

General Contractor: Scott + Reid General Contractors

VIVA RAILINGS®

LEADERS IN ARCHITECTURAL RAILING SYSTEMS

DESIGN ✦ ENGINEER ✦ FABRICATE ✦ INSTALL

151 W. Vista Ridge Mall Dr. Lewisville, TX 75067

(Dallas/Fort Worth Metroplex)

PH: 972.353.8482 | info@vivarailings.com

vivarailings.com

Inc. Magazine 500 | 5000
VIVA RAILINGS, LLC.
Among The Fastest Growing
US Companies
Eight Years in a Row
2012-2019

Inc. Magazine 500 | 5000
VIVA RAILINGS, LLC.
Among The Fastest Growing
Texas Companies
#211

ICC-ES 4405 Certified
SHOE™
Structural Glass Railing System

LEED
Material & Resources Credits 4.1 and 4.2

The American Institute of Architects

The California Contractors State License
Board Certified

Version:01.22.2024